Tiandy

TC-H323Q Spec: 04X/I/E

2MP 4× Starlight Mini EW IR POE PTZ Camera

Lite Series

KEY FEATURES

- Early Warning (EW)
- Up to 1920X1080@30fps
- Min. illumination Color: 0.002Lux@F1.4
- Optical zoom: 4×, digital zoom 16×
- Smart IR, IR Range: 30m
- Support Human/Vehicle Classification
- Built-in Mic&Speaker
- S+265/H.265/H.264/M-JPEG

Tiandy Technologies Co.,Ltd.
Email: sales@tiandy.com Tel: +86-22-58596065
Website: en.tiandy.com Fax: +86-22-58596048

Tiandy

SPECIFICATIONS

Camera	
Image Sensor	1/2.8" CMOS
Signal System	PAL/NTSC
Min. Illumination	Color: 0.002lux@ (F1.4, AGC ON), BW: 0lux with IR
Shutter Time	1s to 1/100,000s
Day & Night	Dual IR Cut Filter
Wide Dynamic Range	120dB
Optical Zoom	4×
Digital Zoom	16×
Lens	
Focal Length	2.8mm~12mm
Zoom Speed	<5s
Angle of View	Horizontal filed of view: 104° (w) ~ 30° (t)
Aperture Range	F1.4~F2.8
Pan&Tilt	
Pan Range	350°
Pan Speed	Pan Manual Speed: 0.1°~60°/s, Pan Preset Speed: 60°/s
Tilt Range	0°~90° (Auto flip)
Tilt Speed	Tilt Manual Speed: 0.1°~60°/s, Tilt Preset Speed: 60°/s
3D Position	Yes
Presets	500
Preset Accuracy	±0.6°
Scan	8
Cruise	16, up to 32 presets per cruise
Pattern	8, each with 600s memory or 1000 orders
Power-off Memory	Yes
RS-485 Protocols	DOME_PELCO_D, DOME_PELCO_P, DOME_PLUS
Illuminator	
IR LEDs	3
IR Range	Up to 30m
IR Irradiation Angle	Fixed
White LEDs	1
Compression Standard	
Video Compression	S+265/H.265/H.264/M-JPEG
Video Bit Rate	32 Kbps to 16 Mbps
Audio Compression	G.711A/G.711U/ADPCM/AAC
Audio Bit Rate	8K~48Kbps
Image	
Max. Resolution	1920×1080
Main Stream	PAL: 25fps (1920×1080, 1280×960), 50fps (1280×720) NTSC: 30fps (1920×1080, 1280×960), 60fps (1280×720)
Sub Stream	PAL: 25fps (704×576, 704×288, 352×288) NTSC: 30fps (704×480, 704×240, 352×240)
Third Stream	PAL: 25fps (352×288) NTSC: 30fps (352×240)
Image Setting	Saturation, brightness, contrast, sharpness, adjustable by client software or web browser
Image Enhancement	BLC/3D DNR/HLC
ROI	7 Dynamic Areas for Both Main and Sub Stream
OSD	16×16, 24×24,32×32, 48×48, 64x64, 96x96, adaptable size, Letters Such as Week, Date, Time, Total 5 Regions
Picture Overlay	Yes
Privace Mask	Yes
Smart Defog	Yes

Tiandy

Feature	
Alarm Trigger	Harsh Voice Alarm, Motion Detection, Mask Alarm, Port Alarm, Network Disable Alarm, IP Conflict, MAC Conflict Detection
Video Analytics	Tripwire, Double Tripwire, Perimeter, Object Abandon, Object Lost, Loitering, Running, Face Detection, Crowed, Video Abnormal, Audio Abnormal, Heatmap
Early Warning(EW)	Yes
Auto-Tracking	N/A
Network	
Protocols	TCP/IP, ICMP, HTTP, HTTPS, DHCP, DNS, DDNS, MULTICAST, UPnP, FTP, IPV4, NTP, RTSP, SMTP, IGMP, QoS, PPPoE
System Compatibility	ONVIF (PROFILE S), SDK, CGI, P2P
ANR	Auto store video in SD card when NVR disconnected, and upload video to NVR when resumed connection (Only Support Tiandy ANR NVR)
Remote Connection	≤7
Client	Easy7, EasyLive
Web Version	Web5
Interface	
Communication Interface	1 RJ45 10M/100M self adaptive Ethernet port
Audio	1/1, Mic in
Alarm	2/1
Reset Button	Yes
On-board storage	Built-in MicroSD card slot, up to 128 GB
RS-485	Yes
BNC	N/A
General	
Firmware Version	NVSS_14.1.3 20180918
Web Client Language	11 languages English, Russian, Spanish, Korean, Italian, Turkish, Simple Chinese, Traditional Chinese, Thai, French, Polish
Operating Conditions	-10°~50°C, 0-90% RH
Power Supply	DC12V±10%/POE
Power Consumption	4.9W (IR OFF), 8.9W (IR ON)
Protection	IP40
Heater	N/A
Dimensions	Φ141x152 mm (Φ5.55×5.98 inch)
Weight	0.85kg (1.87lb)

* Listed resolutions are only selectable options. It does not mean that all streams can work at their maximum resolution at the same time.

AVAILABLE MODEL

TC-H323Q SPEC: 04X/I/E

Tiandy

DIMENSIONS (Unit: mm)

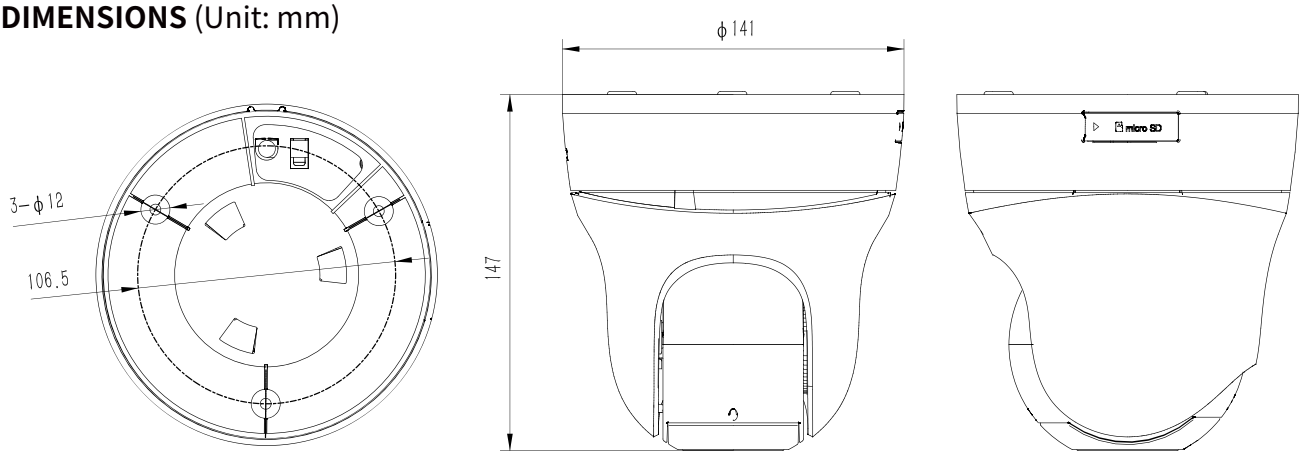

ACCESSORIES

A28
Wall Mount

A23
Mount Adapter

A20
Pendant Mount

DISTRIBUTED BY

Tiandy Technologies Co.,Ltd.
Email: sales@tiandy.com Tel: +86-22-58596065
Website: en.tiandy.com Fax: +86-22-58596048